FLOW SCIENCES, INC.

CERTIFIED ISO 9001:2008 COMPANY

FLOW SCIENCES LEV III™ SERIES
LOCAL EXHAUST VENTILATION

SAVE ENERGY AND LAB SPACE BY MOVING PROCESS APPLICATIONS OUT OF FUME HOODS.

WWW.FLOWSCIENCES.COM
1.800.849.3429

FLOW SCIENCES, INC.

- SAVE ENERGY AND LAB SPACE BY MOVING PROCESS APPLICATIONS OUT OF FUME HOODS.
- MOST EFFECTIVE AND EFFICIENT CONTAINMENT FOR FLASH CHROMATOGRAPHY, ROTOVAPS, AND MORE.

SAFETY. The LEV III™ Series provides safety from chemical vapors generated during processes such as flash chromatography, evaporation from rotary evaporators, and other process equipment applications.

DESIGN. Using a similar design to powder containment enclosures, the LEV III™ series was developed for vapors to be removed from the application and lab. Vapors are pulled to the rear of the enclosure, then up through plenums to keep laminar flow across the work surface and remove vapors effectively.

FIRE SUPPRESSION. Flow Sciences worked with fire protection specialists to design a fire trigger that detects and automatically extinguishes fires from inside the enclosure. Fire Safety LEV III™s are designed to accommodate large-scale operations that require the superior safety of containment technology.

PORTABLE DESIGN. This enclosure is lightweight which makes it easily movable as the dynamics of the laboratory space changes.

PHENOLIC BASE. The chemically resistant phenolic base is dished to maintain spills and coated to protect the work surface from harmful chemicals

GLASS OR ACRYLIC WALLS. FSI uses clear acrylic walls for increased visibility of the application as well as glass options for other chemical processes.

STANDARD SIZES. The LEV III™ comes standard in 2', 3', and 4' options to best fit your application. Custom options are also available.

APPLICATIONS INCLUDE:

- Flash Chromatography
- Rotary Evaporators
- Microwave Digestion
- Oven Processes
- Where Ductless Fume Hoods are Not Allowed
- Where Space is at a Premium
- Many other Processes and Applications

1 EXHAUST PORT
- 4" connection for house systems or can be connected to an FSI remote fan system

2 CLEAR ACRYLIC OR GLASS WALLS
- Clear cast acrylic walls for increased visibility and view of operation

3 GAS SHOCK HINGES
- Gas Shocks allow for the sash to easily be held in an up position

4 SIDE ACCESS DOORS
- Dual side hinged access doors allow for loading and unloading of samples easily

5 FRONT SASH
- Hinged front sash for ease of operator interaction with equipment as well as loading and unloading equipment. Options include an open sash or a closeable sash.

6 DISHED BASE
- Dished phenolic base for catastrophic spills
- Can hold 1.5 Liters in the 3' unit

7 AIRFOIL
- Front airfoil eliminates turbulence and keeps laminar airflow over the operation for better results

8 FS1650 ALARM
- FS1650 Face Velocity Alarm protects the operator with alerts when airflow is compromised

9 REAR PLENUM
- The rear plenum pulls air to the rear of the enclosure to effectively and efficiently remove vapors

FIRE SUPPRESSION SYSTEM
(OPTIONAL)

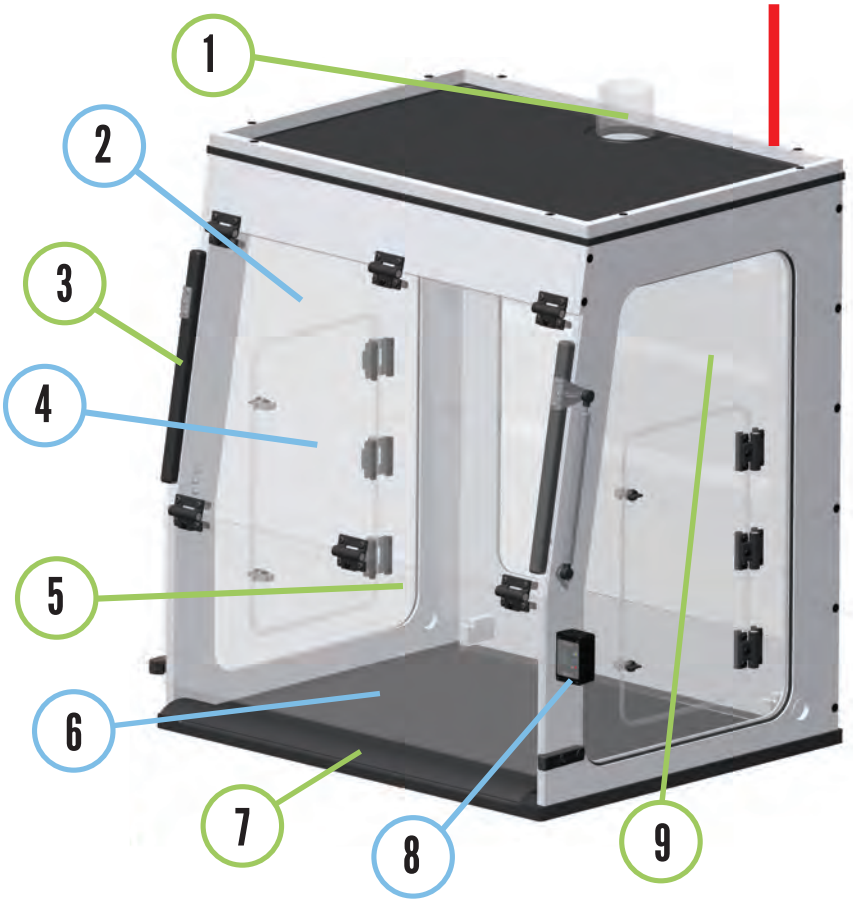

AVAILABLE IN TWO SASH OPTIONS

HINGED DOOR COVERED FACE OPENING (AZA)
FOR LOAD AND GO APPLICATIONS

OPEN FACE OPENING (EZA)
FOR APPLICATIONS WHERE MANIPULATION DURING THE PROCESS IS NECESSARY

Flow Sciences LEV III™ Enclosures - Local Exhaust Ventilation						
Model		EVP363039EZA	EVP483039EZA	EVP243039AZA	EVP363039AZA	EVP483039AZA
Rendering Image		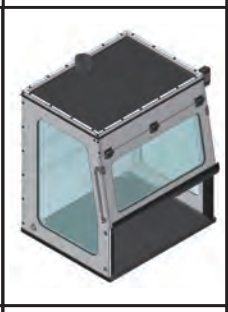	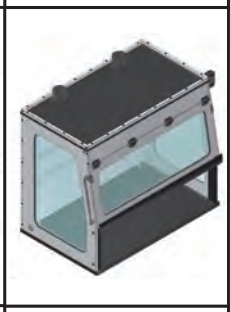	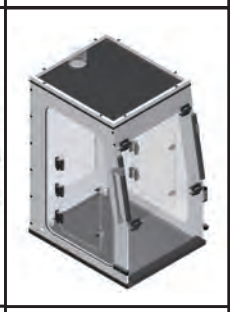	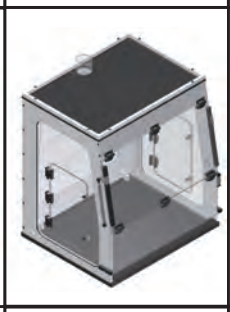	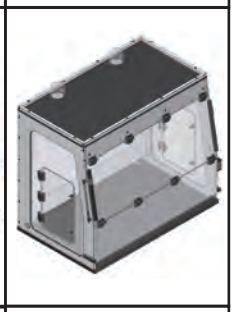
Nominal Size		3' (0.9 meter)	4' (1.2 meter)	2' (0.6 meter)	3' (0.9 meter)	4' (1.2 meter)
External Dimensions (W x D x H)		35.7" x 30" x 43" (90 x 76 x 109 cm)	35.7" x 30" x 43" (85 x 76 x 109 cm)	23.7" x 30" x 43" (60 x 76 x 109 cm)	35.7" x 30" x 43" (90 x 76 x 109 cm)	47.5" x 30" x 43" (121 x 76 x 109 cm)
Internal Dimensions (W x D x H)		31.5" x 24" x 39" (80 x 60 x 99 cm)	21.7" x 26.1" x 39" (55 x 66 x 99 cm)	21.7" x 26.1" x 39" (55 x 66 x 99 cm)	33.7" x 26.1" x 39" (85 x 66 x 99 cm)	45.7" x 26.1" x 39" (116 x 66 x 99 cm)
Face Opening Height (Closed)		14.5" (36 cm)	14.5" (36 cm)	1" (2.5 cm)	1" (2.5 cm)	1" (2.5 cm)
Face Opening Height (Open)		33" (85 cm)	33" (85 cm)	33" (85 cm)	33" (85 cm)	33" (85 cm)
FSI Recommended 75 FPM Face Velocity		255 CFM Required	346 CFM Required	24 CFM Required	36 CFM Required	49 CFM Required
100 FPM Face Velocity		340 CFM Required	461 CFM Required	31 CFM Required	48 CFM Required	65 CFM Required
Approximate Weight		195 lb (87 kg)	240 lb (109 kg)	123 lb (56 kg)	162 lb (74 kg)	200 lb (91 kg)
Materials of Construction	**Acrylic**			Transparent 0.375" clear Acrylic Front, Side Panels, and Front/Access Doors		
	Glass	.25" Laminated Glass Windows				
	Polypropylene	White 0.375" Polypropylene Superstructure				
	Phenolic	Black 0.5" Phenolic Resin Base and Top, Routed to Fit Sidewalls for Containment of Spills				
Fan		NO FAN, Designed to be Connected Directly to House Exhaust with 4" Outlet(s)				
Filter		NO FILTER, Designed to be Connected Directly to House Exhaust with 4" Outlet(s)				
Vent Kit		FS2050 - 4" to 6"	FS2060 - (2) 4" to 6"	FS2050 Vent Kit - 4" to 6"		FS2060 - (2) 4" to 6"
Face Opening	**Open**			Hinged Door Covered Face Opening with Gas Shocks		
	Closed	Open Face Opening with Door and Gas Shocks				
LED Light	**Lifetime**	About 50,000 Hours				
	Input Power	575ma at 12 Volts DC				
	Lumens	Max of 675 Lumens				
	Beam Angle	120 Degree Beam Angle				
Velocity Alarm		Integrated Go/No-Go Velocity Alarm - 0.2 Amps				
Factory Testing	**ASHRAE**	ASHRAE 110-2016 Containment of ≤0.050 PPM				
	HAM	Human as Mannequin Test of ≤0.050 PPM				

FLOW SCIENCES, INC.

WWW.FLOWSCIENCES.COM
1.800.849.3429